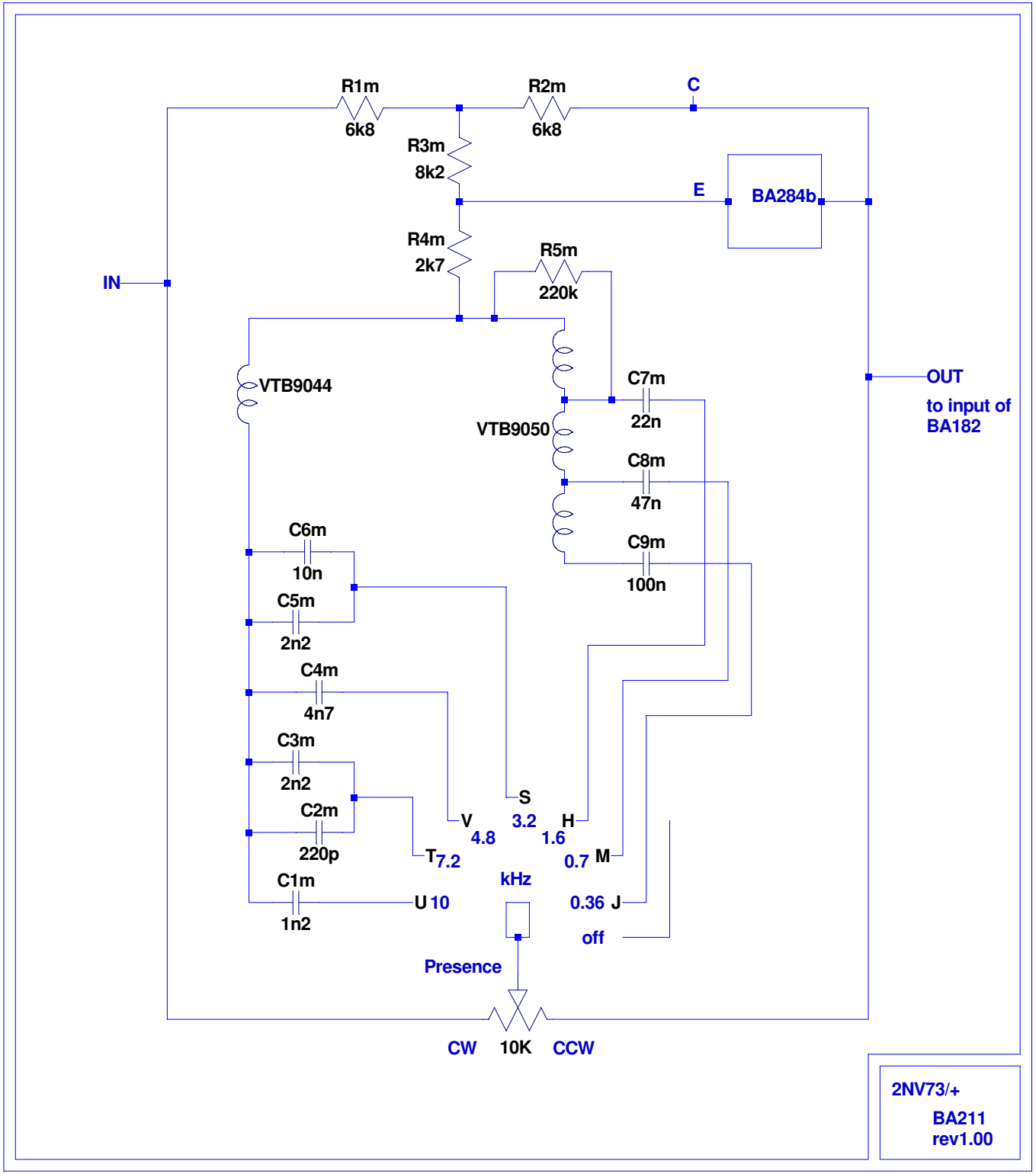

--- P:\AUDIO DIY\LTspiceIV\schematic 2nv73\2NV73_BA211_schematic.asc ---